Product Information Sheet

FyreWrap®

FyreWrap® Elite® 1.5 Duct Insulation – Grease Duct ASTM E2336 System

Introduction

Alkegen's FyreWrap® Elite® 1.5 Duct Insulation is a two-layer flexible enclosure for two-hour rated commercial kitchen grease ducts. FyreWrap Elite 1.5 Duct Insulation is tested per ASTM E2336 and is acceptable as an alternate to a traditional fire-rated shaft. Installed as a two-layer system, FyreWrap Elite 1.5 complies with the International Mechanical Code (IMC) and Uniform Mechanical Code (UMC).

FyreWrap Elite 1.5 Duct Insulation offers the following product features:

- 2-hour fire-resistance rating
- Alternate to shaft enclosure
- Complies with IMC and UMC
- Tested per ASTM E2336
- Two-layer system
- High-temperature, biosoluble insulation
- Zero clearance to combustibles, at any location
- GREENGUARD listed for Microbial Resistance



FyreWrap® Elite® 1.5 Duct Insulation

Typical Product Parameters

Thickness	1.5"
Nominal Density	6pcf
Standard Product Form	Scrim Encapsulated
Product Availability	24"w x 25LF 48"w x 25LF

Product Components

Core Material: FyreWrap Elite 1.5 incorporates Insulfrax® Thermal Insulation as its core material. Insulfrax is a hightemperature insulation made from a calcia, magnesia, silica chemistry designed to enhance biosolubility. It provides excellent insulation in a noncombustible blanket product form rated to 2300ºF (1260ºC).

Encapsulating Material: The core insulation blanket is completely encapsulated in an aluminum foil fiberglassreinforced scrim covering. This scrim provides additional handling strength as well as protection from grease, moisture absorption and tearing.

Typical Product Properties

ICC Evaluation Services	Evaluation Report ESR-2224	
Intertek Laboratories Listed	Duct System: Design No. UNI/BI 120-02, UNI/BI 120-14, UNI/WA 120-01	
ASTM E2336	Passes all tests	
ASTM E2336 Internal Grease Duct Test	Zero Clearance to Combustibles at all locations on wrap	
ASTM E119 Full Scale Engulfment Test	2-hour Fire Resistance Rating	
ASTM E119 Vertical Wall Test	2-hour Fire Resistance Rating	
ASTM E84, UL 723, ULC S102.2 – UL File No. R14514	Unfaced Blanket	Encapsulated
Flame Spread/Smoke Developed Rating	Zero/Zero	<25/<50
ASTM E814 Firestop Test	Firestop System: UNI/FRD 120-19, UNI/BI 120-02,	
F-Rating = 2 Hrs., T-Rating = 2 Hrs.	UNI/BI 120-14	
ASTM E136 Non-Combustibility Test	Passes1	
ASTM C518 Durability Test	Passes; R-Value = 4.8 per inch at 75ºF	
ASTM C518 Thermal Resistance	R-Value of Elite 1.5 (1½") = 7.2	
ASTM D6329-03 Microbial Resistance	Highly Resistant to Mold Growth	
California State Fire Marshal Listing	No: 2440-1478:0101	

Complies with: NFPA 96 (all editions), 1997 ICBO Uniform Mechanical Code (UMC), 1997 ICBO Uniform Building Code (UBC), 2018 International Mechanical Code (IMC), 2018 IAPMO UMC (Uniform Mechanical Code).

ESR-2224

Complies with: NFPA 96

INTERNATIONAL FIRESTOP COUNCIL

ALKEGEN

SAFE ENERGY

Importado y distribuido por
Safe Energy SpA

Product Information Sheet

FyreWrap

FyreWrap® Elite® 1.5 Duct Insulation – Grease Duct ASTM E2336 System

Installation (Figure 1)

To minimize waste, FyreWrap Elite 1.5 should be rolled out tautly before measuring and making any material cuts. Install both layers of wrap with transverse (perimeter) and longitudinal butted joints. Between the first and second layers of wrap stagger transverse joints and offset longitudinal joints to different corners. All visually exposed blanket edges are to be sealed with minimum 3" wide aluminum foil tape and the use of filament tape is not required but is permitted to ease installation. The installation materials must comply with the options listed in Table 1.

Note: 3" material overlaps can be substituted for compression butt joints.

Table 1: Material Requirements

Item	Type and Specification
Bands	• Carbon steel or Stainless steel • Min. ½" wide & nom. 0.015" thick
Crimp clips	• Carbon steel or Stainless steel • Min 1" long
Pins	• Steel • Weld Pins or Cup Head • Min. 12 Gauge
Washers	• Galvanized Steel • Min. 2½" square or 1½" round

Attachment Options

Banding only

Place bands at 1½" on both sides of all second layer transverse butt joints and add additional bands as needed to ensure spacing is max. 10½" on center. Tighten banding to firmly hold the wrap system in place but not so tight as to cut or damage the blanket. Secure bands with crimp clips.

Note: No bands are required on the first layer.

Banding and Pins

For ducts greater than 24", in addition to installing bands as described in the Banding Option, weld steel insulation pins in rows to the underside of horizontal runs1. Locate pins on both sides of all second layer transverse butt joints 3" apart. Add additional rows as needed to ensure longitudinal spacing is max. 10". Pins in each row are to be max. 6" from each duct edge and max. 12" on center. Impale FyreWrap Elite 1.5 Duct Insulation over the pins and secure with washers (cup head pins also permitted).

1 Pins are not required on vertical duct sections when using this option.
Note: In lieu of banding, pins installed on all sides of the duct is permitted.

Access Door (Figure 2)

Field fabricated and prefabricated grease duct access doors are permitted for use with FyreWrap Elite 1.5 Duct Insulation. Field fabricated access doors are protected with three layers of FyreWrap Elite 1.5 Duct Insulation. A gasket of 0.5" thick unfaced FyreWrap or ceramic fiber blanket is initially installed between the duct and the access door cover. Weld threaded rod to each corner of the access door opening.

Cover with hollow steel tubes (optional) for easy removal of blanket. Weld at least four steel insulation pins to the outside of the door cover panel, 1" from each corner. Cut through the two layers of FyreWrap Elite 1.5 Duct Insulation already covering the duct and access door opening. Leave the interior piece in place. Cut back the outer layer to form an opening with perimeter dimensions that extend 1" beyond the inner layer. Cut a piece of FyreWrap Elite 1.5 Duct Insulation that matches the dimensions of the opening and install over pins to fit tightly within the existing material. Cut an additional piece of insulation with perimeter dimensions that extend 1" beyond the layer below. Install over the insulation pins. Throughout the installation process, seal all cut edges with aluminum foil tape. Secure with washers and bend over excess pin lengths to eliminate safety hazards. Place washers on threaded rod and secure with nuts. Do not install banding over this area.

Prefabricated – Ductmate Ultimate and Ductmate F2-HT prefabricated access doors are permitted and must be installed in accordance with Ductmate Industries, Inc. installation instructions and the applicable code. The prefabricated access door is protected with three layers of FyreWrap Elite 1.5 Duct Insulation. The first layer is cut to the size of the door. A successive layer (two additional layers) is sized to create an overlap of 1" beyond the layer immediately below. All edges of insulation blanket must be protected with aluminum foil tape. A No. 16 gauge outer plate the same dimension as the outer layer of insulation blanket is held in place over the insulation using threaded rod and wing nuts. The outer plate is supplied with the Ultimate door and F2-HT doors. Access doors are available from Ductmate Industries, Inc. Contact www.ductmate.com or 1-800-245-3188 for additional information or local distributors. Ask for the Access Door Product Line Manager.

Firestop Systems (Figures 3 and 4)

Where ducts insulated with FyreWrap Elite 1.5 Duct Insulation pass through fire-rated walls and floors, the penetration opening shall be firestopped to maintain the fire rating of the assembly. Firestop Systems acceptable for use with FyreWrap Elite 1.5 Duct Insulation ASTM E2336 System at the time of printing are detailed on pages 4 and 5.

Duct Support (Figure 5)

Horizontal duct support systems do not require FyreWrap insulation when constructed using a minimum ⅜" diameter uninsulated all-thread steel rod and 1½" x 1½" x ⅛" uninsulated steel angle spaced a maximum 60" on center along the length of the duct. A minimum clearance of 1" is required between the protected duct and the steel rod. To increase hanger spacing to 72" on center, ½" all-thread steel rod and 2" x 2" x ¼" steel angle are required. Vertical duct support systems do not require FyreWrap insulation when constructed using minimum 1½" x 1½" x ¼" steel angle brackets located on opposite sides of the duct, on the top and bottom of each floor-ceiling assembly. The supports are attached to the duct with welds. Maximum spacing between vertical supports shall be established by structural calculations in accordance with the applicable code, that are submitted to the building official for approval.

ALKEGEN

SAFE ENERGY

Importado y distribuido por
Safe Energy SpA

Product Information Sheet

FyreWrap®

FyreWrap® Elite® 1.5 Duct Insulation – Grease Duct ASTM E2336 System

Figure 1. Butt Joint Technique

FyreWrap® Elite® 1.5 Duct Insulation
Commercial Kitchen Grease Duct
System ASTM E2336 - 2 Hour Fire-Rated Enclosure, Shaft
Alternative Zero Clearance to Combustibles - Butt Joint System

FP -959

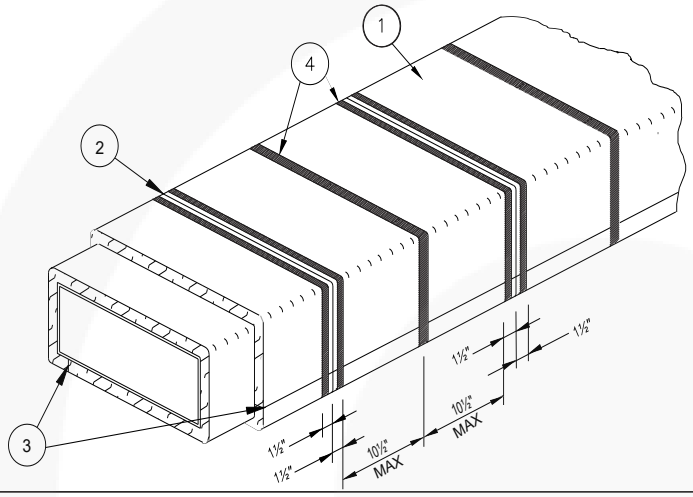

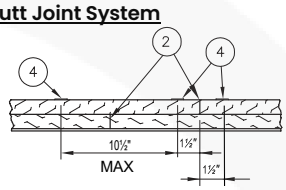

Butt Joint
Adjacent Blanket Pieces

Legend:	
1	FyreWrap® Elite® 1.5 Duct Insulation, Two Layers (each 1.5", total thickness = 3")
2	1" Compressed Butt Joint (Transverse)
3	1" Compressed Butt Joint (Longitudinal)
4	½" Carbon or SS Banding Straps (2nd layer only)
5	Filament Tape (Optional)

*Applies to both horizontal and vertical duct orientations.
**Review page 2 prior to installation for detailed instructions
***Longitudinal butt joints can be located at any corner staggered between layers .

Figure 2. Access Door

FyreWrap® Elite® 1.5 Duct Insulation
Commercial Kitchen Grease Duct System
Access Door Systems

FP -426

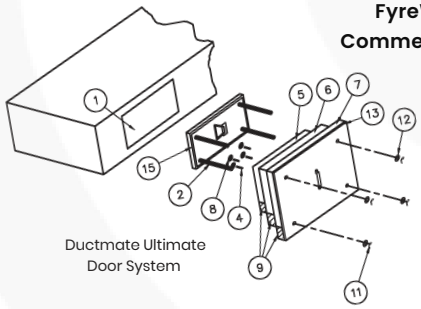

Ductmate Ultimate
Door System

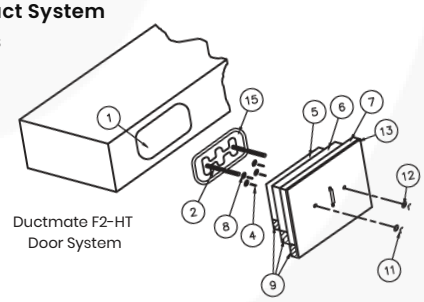

Ductmate F2-HT
Door System

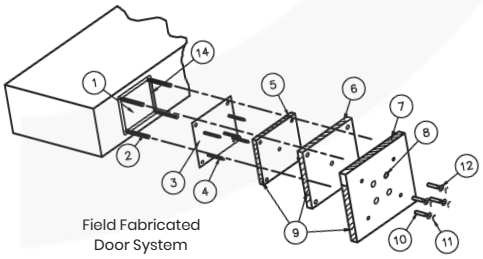

Field Fabricated
Door System

Legend:	
1	Access Door Opening
2	All Thread Rods
3	Access Door Cover Panel 16 Gauge (field fab. only)
4	Insulation Pins – Welded to Cover
5	First Layer FyreWrap® Elite® 1.5
6	Second Layer FyreWrap® Elite® 1.5, 1" Overlap
7	Third Layer FyreWrap® Elite® 1.5, 1" Overlap
8	Speed Clips/Washers
9	Cut Edges Sealed With Aluminum Foil Tape
10	Spool pieces for threaded rods (optional field fab. only)
11	Wing Nuts
12	Washers
13	Insulation plate
14	Unfaced FyreWrap blanket or Ceramic fiber gasket, ½" thick
15	Prefabricated access door

ALKEGEN

SAFE ENERGY®
Importado y distribuido por
Safe Energy SpA

Product Information Sheet

FyreWrap® Elite® 1.5 Duct Insulation – Grease Duct ASTM E2336 System

Figure 3. Firestop Installation

FyreWrap® Elite® 1.5 Duct Insulation Through Penetration Firestops Wall
Intertek Design No. UNI/BI 120-02 & 120-14, F-Rating = 2 Hrs. T-Rating = 2 Hrs.

FP -690

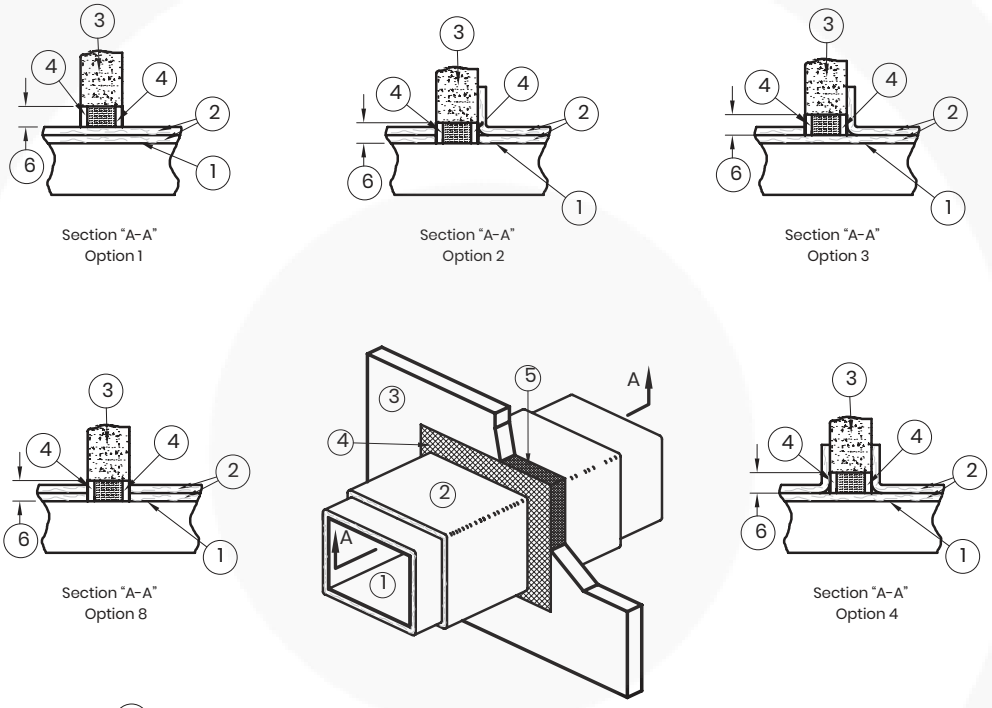

Legend:	
1	Grease Duct, max. 2401 in² area, 49" max width
2	FyreWrap® Elite® 1.5 Duct Insulation, Two Layers
3	Fire-Resistive Concrete, Gypsum, or CMU block wall assembly, 2 hr. rated
4	Firestop Sealant, ⅜" depth, overlapping on wall and duct min. ½" 3M Fire Barrier 1000NS or Hilti FS-ONE or STI SpecSeal or Tremco FyreSil
5	Unfaced FyreWrap® Elite® 1.5 or 4 PCF Mineral Wool compressed 50% option 1 and 33% options 2-8, recessed ⅜" from both sides of wall
6	Annular space, ½" to 4½"

Importado y distribuido por
Safe Energy SpA

Product Information Sheet

FyreWrap® Elite® 1.5 Duct Insulation – Grease Duct ASTM E2336 System

Figure 4. Firestop Installation

FP -691

FyreWrap® Elite® 1.5 Duct Insulation Through Penetration Firestops Floor
Intertek Design No. UNI/BI 120-02 & 120-14, F-Rating = 2 Hrs. T-Rating = 2 Hrs.

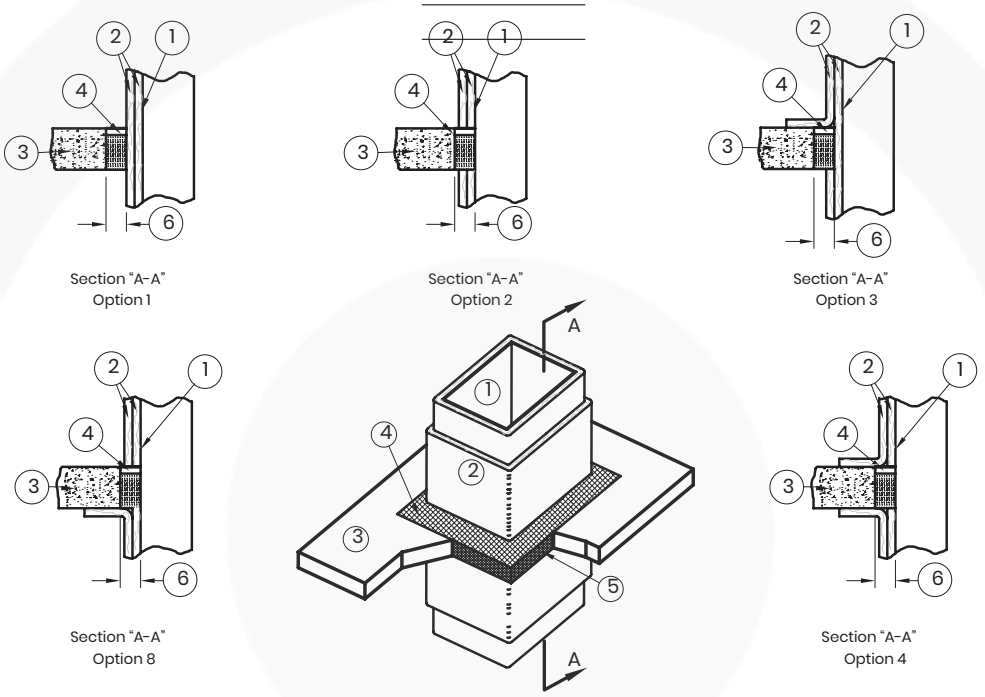

Legend:	
1	Grease Duct, max. 2401 in² area, 49" max width
2	FyreWrap® Elite® 1.5 Duct Insulation, Two Layers
3	Fire-Resistive Concrete Floor/Ceiling assembly, 2 hr. rated
4	Firestop Sealant, ⅜" depth, overlapping on floor and duct min. ½" 3M Fire Barrier 1000NS or Hilti FS-ONE or STI SpecSeal SSS or Tremco FyreSil
5	Unfaced FyreWrap® Elite® 1.5 or 4 PCF Mineral Wool compressed 50% option 1 and 33% options 2-8, recessed ⅜" from top side of floor
6	Annular space, ½" to 4½"

Importado y distribuido por
Safe Energy SpA

Product Information Sheet

FyreWrap®

FyreWrap® Elite® 1.5 Duct Insulation – Grease Duct ASTM E2336 System

Figure 5. Support System

FP -625R1

FyreWrap® Elite® 1.5 Duct Insulation
Typical Duct Support Details

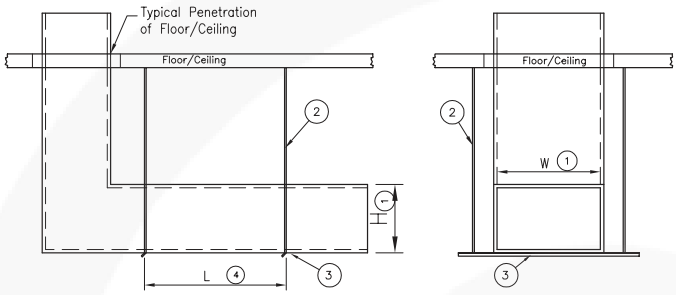

Typical Horizontal Duct Support Details

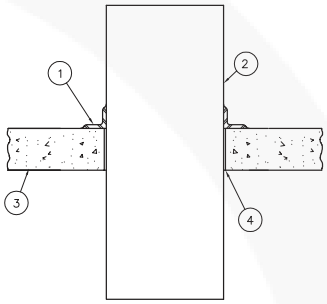

Typical Vertical Duct Support Details

Legend:			
1	Max. Duct Size (HxW)	49" x 49"	49" x 49"
2	Steel Threaded Rod	⅜" diameter	½" diameter
3	Steel Angle	1½" x 1½" x ⅛"	2" x 2" x ¼"
4	Support System Spacing (L)	60"	72"

Legend:	
1	Duct Support Mechanism
2	Grease Duct
3	Fire Resistive Concrete Floor/Ceiling Assembly
4	Firestop System (figure 4)

For additional information about product performance or to identify the recommended product for your fire protection application, please contact Alkegen at 716-768-6500 and ask for Fire Protection Application Engineering.

Refer to the product Safety Data Sheet (SDS) for recommended work practices and other product safety information.

The following are registered trademarks of Alkegen: FyreWrap, Elite and Insulfrax.

The test data shown are average results of tests conducted under standard procedures and are subject to variation. Results should not be used for specification purposes. Product Information Sheets are periodically updated by Alkegen. Before relying on any data or other information in this Product Information Sheet, you should confirm that it is still current and has not been superseded. A Product Information Sheet that has been superseded may contain incorrect, obsolete and/or irrelevant data and other information.

Alkegen
Headquarters
5215 N. O'Connor Blvd, Suite 2300
Irving, TX 75039
Telephone: 716-768-6500
Website: www.alkegen.com
Email: info@alkegen.com

Form A-5180
Effective 03/24
© 2024 Alkegen
All Rights Reserved

ALKEGEN

SAFE ENERGY®
Importado y distribuido por
Safe Energy SpA